ODL, Inc.

GLAZED STEEL ENTRY DOOR SINGLE w/ SIDELITES(S)

INSWING/OUTSWING "NON-IMPACT"

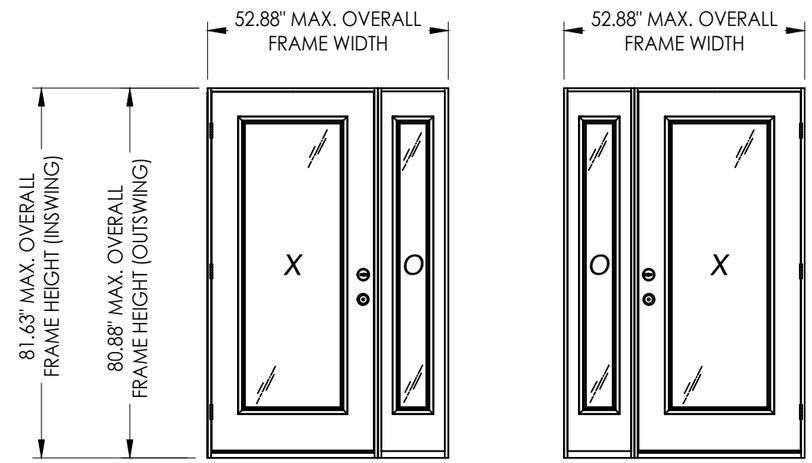

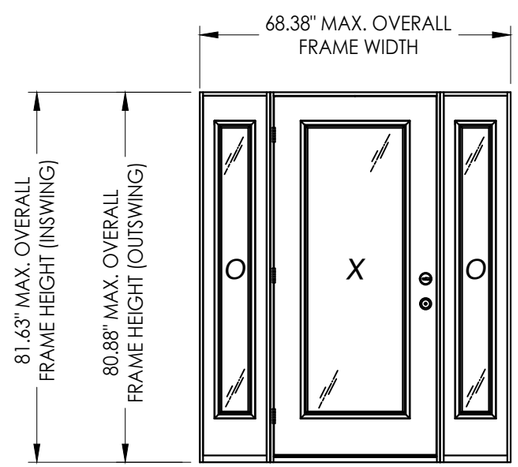

GENERAL NOTES

1. This product has been evaluated and is in compliance with the 8th Edition (2023) Florida Building Code (FBC) structural requirements excluding the "High Velocity Hurricane Zone" (HVHZ).
2. Product anchors shall be as listed and spaced as shown on details. Anchor embedment to base material shall be beyond wall dressing or stucco.
3. When used in areas requiring wind borne debris protection, this product is required to be protected with an impact resistant covering that complies with FBC Sections 1609.1.2 & R301.2.1.2.
4. For 2x stud framing construction, anchoring of these units shall be the same as that shown for 2x buck masonry construction.
5. Site conditions that deviate from the details of this drawing require further engineering analysis by a licensed engineer or registered architect.

TABLE OF CONTENTS

SHEET #	DESCRIPTION
1	Typical Elevations, Design Pressures & General Notes
2	Door Panel Details
3	Sidelite Panel & Glazing Details
4	Elevations
5	Horizontal & Vertical Cross Sections (2X Buck)
6	Horizontal & Vertical Cross Sections (1X Buck)
7	Horizontal & Vertical Cross Sections (Direct to Masonry)
8	Horizontal Cross Sections
9	Vertical Cross Sections
10	Buck Anchoring
11	Frame Anchoring & Hardware Details
12	Bill of Materials & Components

CONFIGURATION	MAX. FRAME DIMENSION	DESIGN PRESSURE (PSF) INSWING		DESIGN PRESSURE (PSF) OUTSWING	
		POSITIVE	NEGATIVE	POSITIVE	NEGATIVE
OX/XO	52.88" x 81.63"	+40.0	-45.0	+40.0	-40.0
OXO	68.38" x 81.63"	+40.0	-45.0	+40.0	-40.0

L. F. SCHMIDT LICENSE No. 43409 STATE OF FLORIDA PROFESSIONAL ENGINEER

Digitally signed by Lyndon F Schmidt
Date: 2026.03.31 07:43:17 -04'00'

This item has been digitally signed and sealed by **L. F. Schmidt, P.E.** on the date adjacent to the seal.

Printed copies of this document are not considered signed and sealed and the signature must be verified on any electronic copies.

Documents Prepared By:
Lyndon F. Schmidt
P.E. No. 43409

RW BUILDING CONSULTANTS, INC.
P.O. Box 230, Valrico, FL 33595
Phone No.: 813.659.9197
FBPE Registry No. 9813

PRODUCT: ODL, INC. STEEL DOOR

PART OR ASSEMBLY: TYPICAL ELEVATION, DESIGN PRESSURES & GENERAL NOTES

REVISIONS

NO.	DATE	MANUFACTURER'S NAME CHANGE	BY
3	3/30/26		LFS

DATE: 3/18/26
SCALE: N.T.S.
DWG. BY: LFS
CHK. BY: RW
DRAWING NO.: FL-29651.5
SHEET 1 OF 12

© 2026 R.W. BUILDING CONSULTANTS INC.

Z:\2023 FBC Drawings\ODL, Inc\FL-29651 R3\FL-29651.4-6.dwg

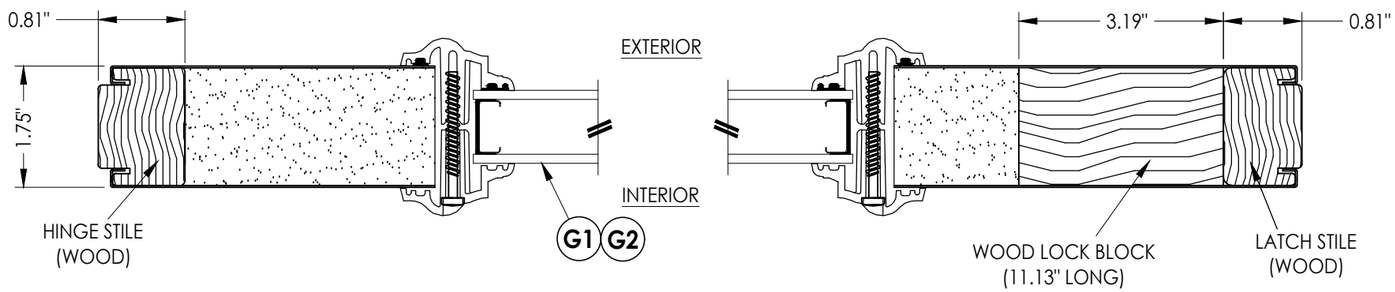

1/2 **HORIZONTAL CROSS SECTION**

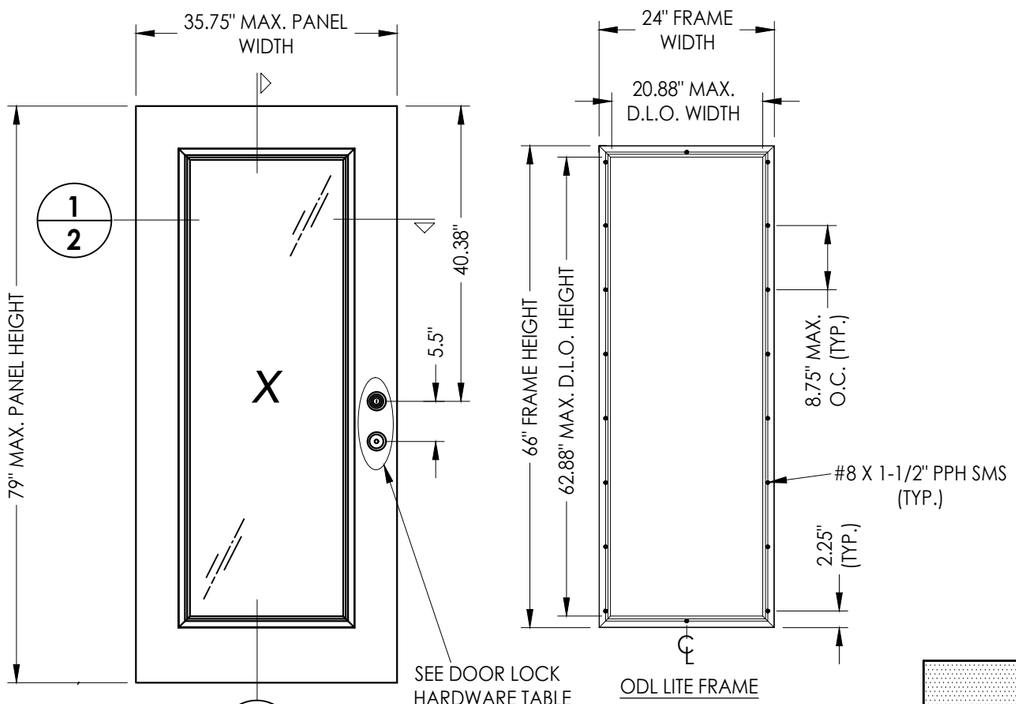

40 **STEEL DOOR PANEL**
ODL, INC.

STEEL SKIN: 25 GA. (0.018" MIN. THK.)
FOAM CORE: POLYUREHTANE

HARDWARE TABLE		
MANUFACTURER	MODEL	
KWIKSET	KNOB: DEADBOLT:	SIGNATURE SERIES SIGNATURE SERIES (780)
SCHLAGE	KNOB: DEADBOLT:	F-SERIES (F51) B-SERIES (B60)

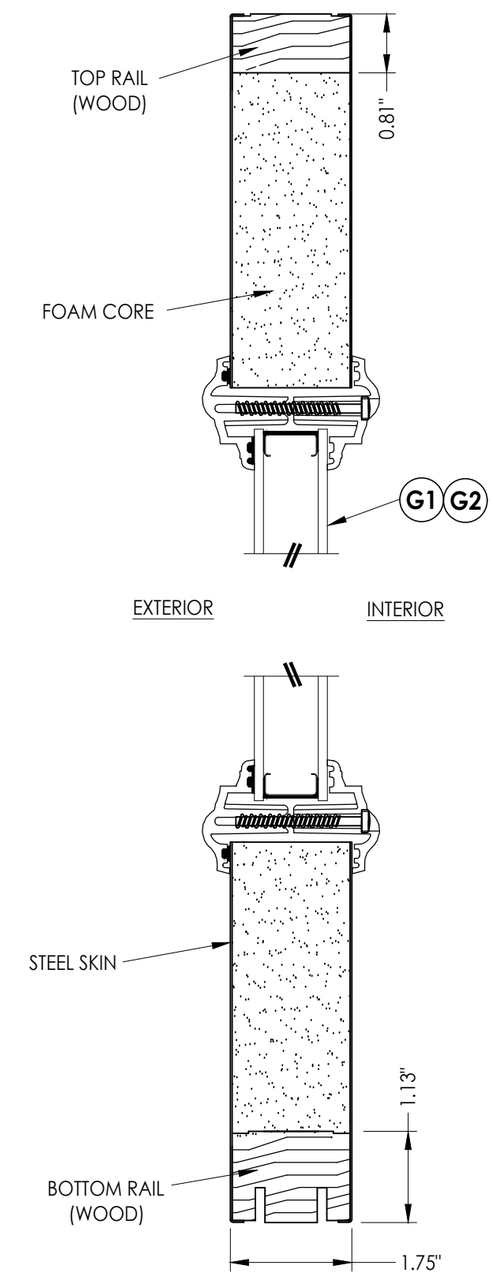

2/2 **VERTICAL CROSS SECTION**

Documents Prepared By:
Lyndon F. Schmidt
P.E. No. 43409

RW BUILDING CONSULTANTS, INC.
P.O. Box 230, Valrico, FL 33595
Phone No.: 813.659.9197
FBPE Registry No. 9813

PRODUCT: ODL, INC. STEEL DOOR

PART OR ASSEMBLY: DOOR PANEL DETAILS

NO.	DATE	MANUFACTURER'S NAME CHANGE	BY
3	3/30/26		LFS

REVISIONS

DATE: 3/18/26
SCALE: N.T.S.
DWG. BY: LFS
CHK. BY: RW
DRAWING NO.: FL-29651.5
SHEET 2 OF 12

© 2026 R.W. Building Consultants Inc.

Z:\2023 FBC Drawings\ODL, Inc\FL-29651 R3\FL-29651.4-6.dwg

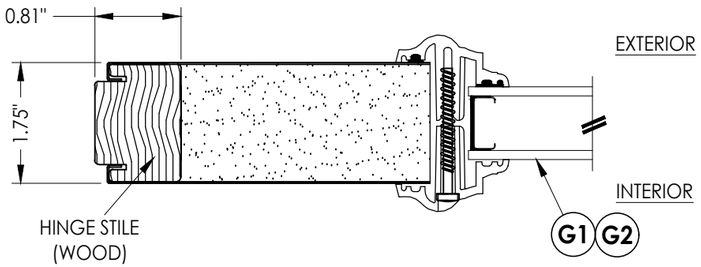

1/3 **HORIZONTAL CROSS SECTION**

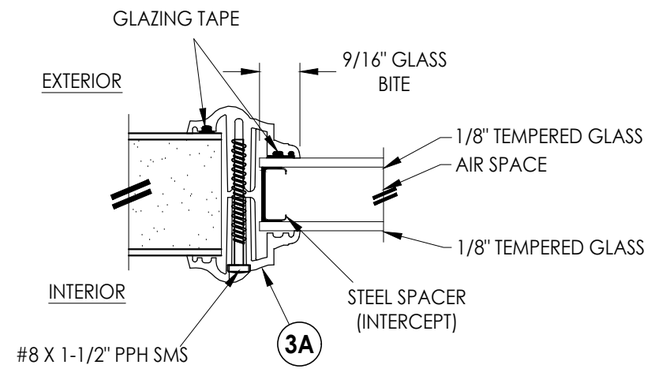

G1 **GLAZING DETAIL**
ODL LITE FRAME

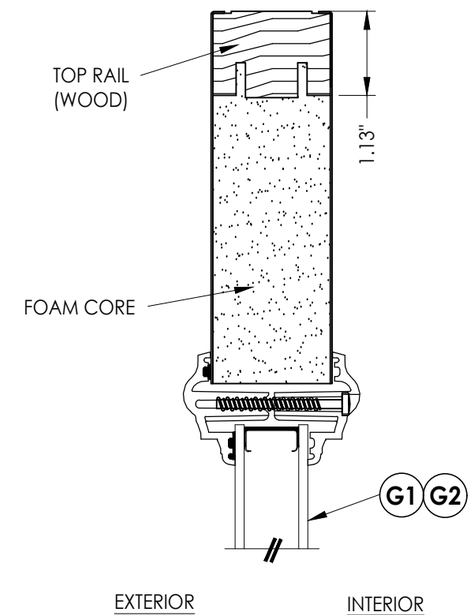

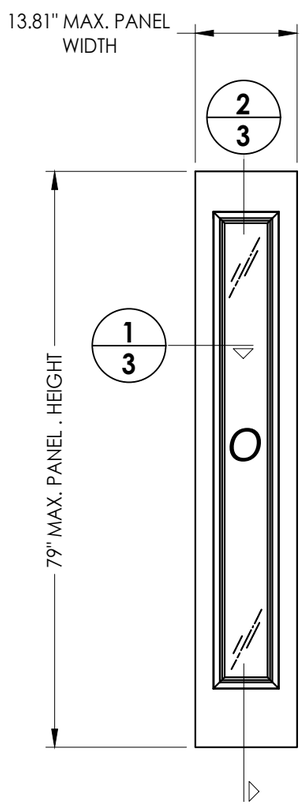

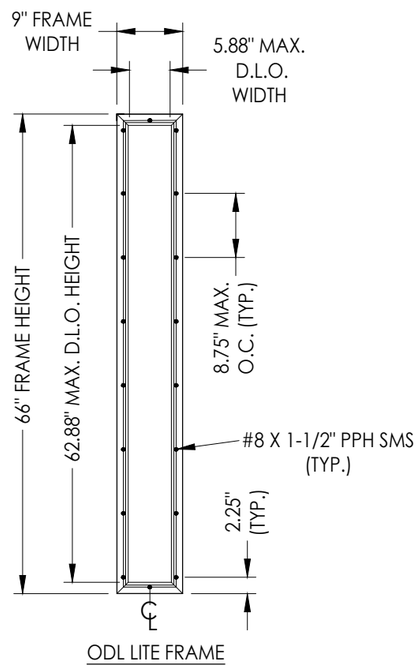

50 **STEEL SIDELITE PANEL**
ODL, INC.

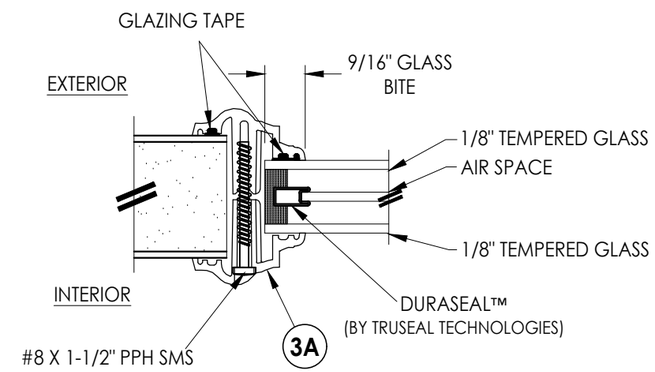

G2 **GLAZING DETAIL**
ODL LITE FRAME

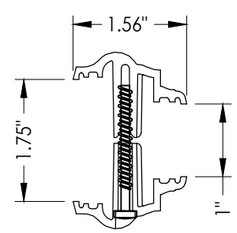

3A **ODL LITE FRAME**
EVOLVE FRAME
HP POLYPROPYLENE

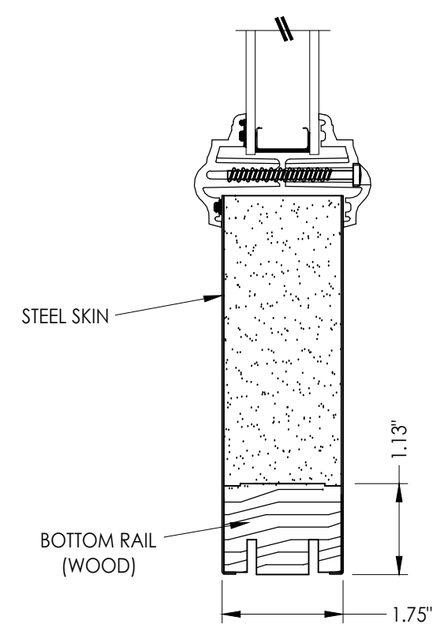

2/3 **VERTICAL CROSS SECTION**

STEEL SKIN: 25 GA. (0.018" MIN. THK.)
FOAM CORE: POLYUREHTANE

Documents Prepared By:
Lyndon F. Schmidt
P.E. No. 43409

RW BUILDING CONSULTANTS, INC.
P.O. Box 230, Valrico, FL 33595
Phone No.: 813.659.9197
FBPE Registry No. 9813

PRODUCT: ODL, INC. STEEL DOOR

PART OR ASSEMBLY: SIDELITE PANEL & GLAZING DETAILS

REVISIONS

NO.	DATE	MANUFACTURER'S NAME CHANGE	BY
3	3/30/26		LFS

DATE: 3/18/26
SCALE: N.T.S.
DWG. BY: LFS
CHK. BY: RW
DRAWING NO.: FL-29651.5
SHEET 3 OF 12

© 2026 R.W. Building Consultants Inc.

Z:\2023 FBC Drawings\ODL, Inc\FL-29651 R3\FL-29651.4-6.dwg

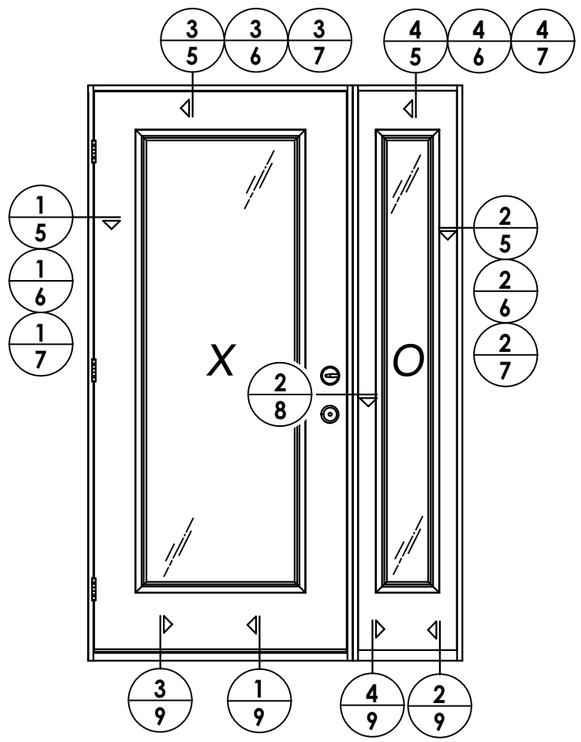

ELEVATION
XO / OX

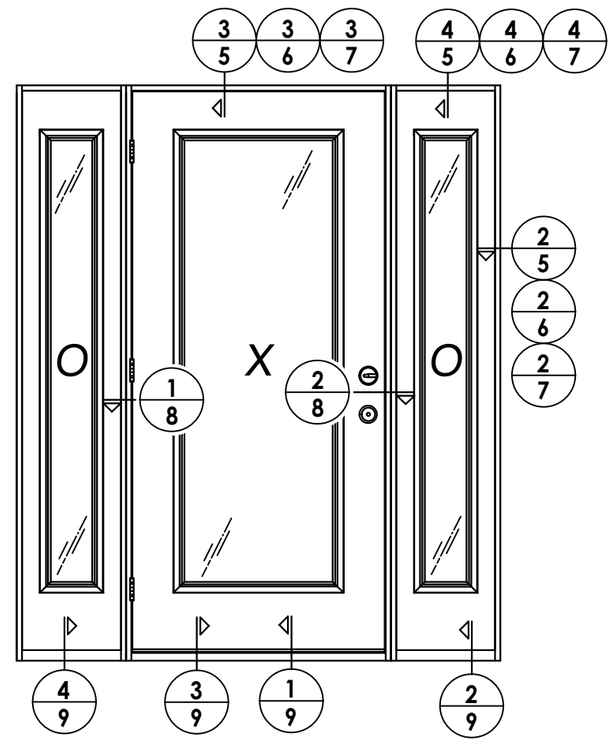

ELEVATION
OXO

Documents Prepared By:
Lyndon F. Schmidt
P.E. No. 43409

RW BUILDING CONSULTANTS, INC.
P.O. Box 230, Valrico, FL 33595
Phone No.: 813.659.9197
FBPE Registry No. 9813

PRODUCT: ODL, INC. STEEL DOOR

PART OR ASSEMBLY: ELEVATIONS

REVISIONS

NO.	DATE	MANUFACTURER'S NAME CHANGE	BY
3	3/30/26		LFS

DATE: 3/18/26
SCALE: N.T.S.
DWG. BY: LFS
CHK. BY: RW
DRAWING NO.: FL-29651.5
SHEET 4 OF 12

© 2026 R.W. Building Consultants Inc.

Z:\2023 FBC Drawings\ODL, Inc\FL-29651 R3\FL-29651.4-6.dwg

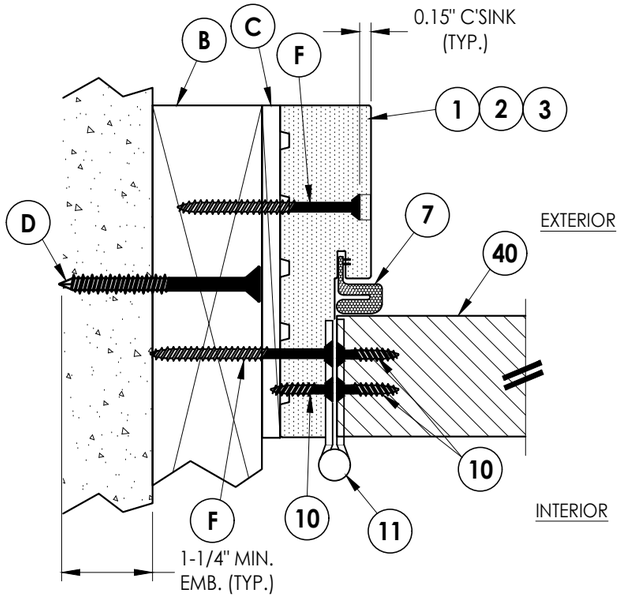

1/5 HORIZONTAL CROSS SECTION
Inswing Shown (Outswing Similar)
2X Buck Construction

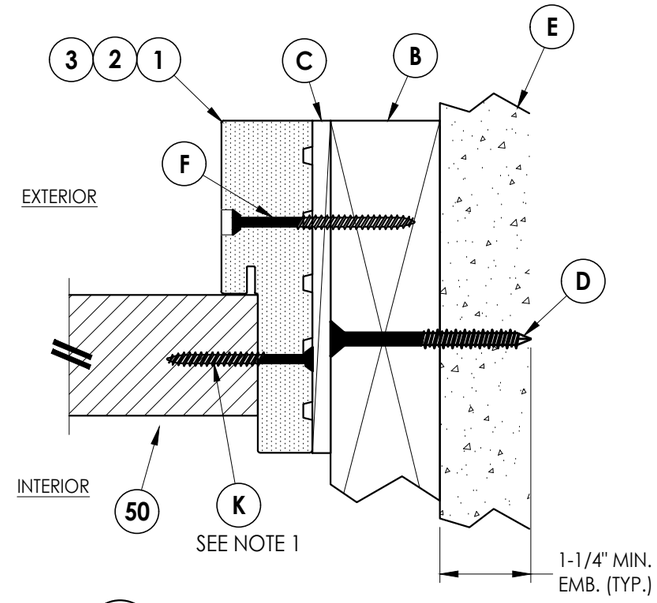

2/5 HORIZONTAL CROSS SECTION
Inswing Shown (Outswing Similar)
2X Buck Construction

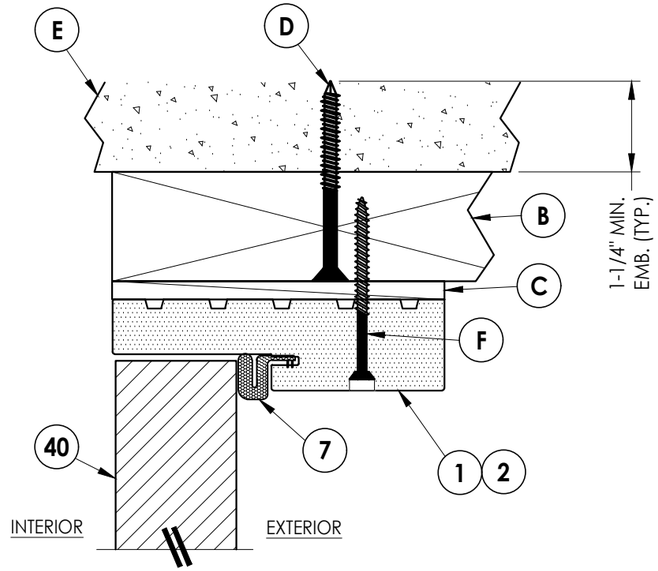

3/5 VERTICAL CROSS SECTION
Inswing Shown (Outswing Similar)
2X Buck Construction

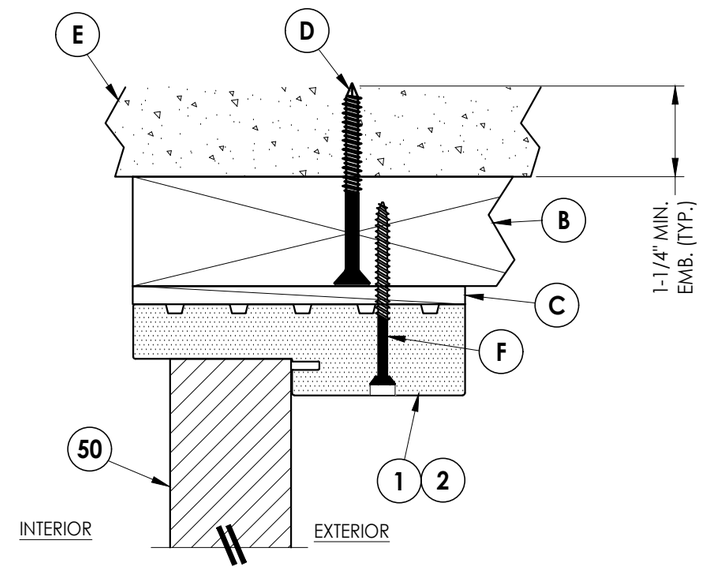

4/5 VERTICAL CROSS SECTION
Inswing Shown (Outswing Similar)
2X Buck Construction

NOTE:
1. Sidelite attached @ 6" from each end plus 4 more screws equally spaced between (6 screws total per jamb).

Documents Prepared By:
Lyndon F. Schmidt
P.E. No. 43409

RW BUILDING CONSULTANTS, INC.
P.O. Box 230, Valrico, FL 33595
Phone No.: 813.659.9197
FBPE Registry No. 9813

PRODUCT: ODL, INC. STEEL DOOR

PART OR ASSEMBLY: HORIZONTAL & VERTICAL CROSS SECTIONS (2X BUCK)

NO.	DATE	MANUFACTURER'S NAME CHANGE	BY
3	3/30/26		LFS

REVISIONS

DATE: 3/18/26
SCALE: N.T.S.
DWG. BY: LFS
CHK. BY: RW
DRAWING NO.: FL-29651.5
SHEET 5 OF 12

© 2026 R.W. Building Consultants Inc.

Z:\2023 FBC Drawings\ODL, Inc\FL-29651 R3\FL-29651.4-6.dwg

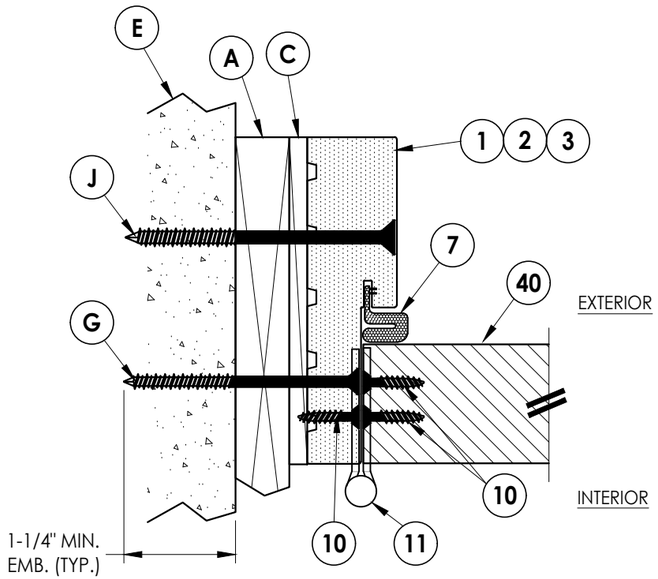

1/6 HORIZONTAL CROSS SECTION
Inswing Shown (Outswing Similar)
1X Buck Construction

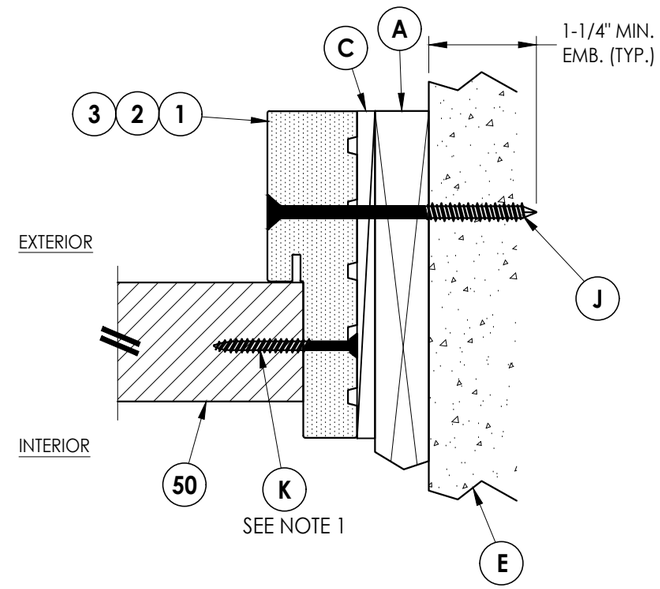

2/6 HORIZONTAL CROSS SECTION
Inswing Shown (Outswing Similar)
1X Buck Construction

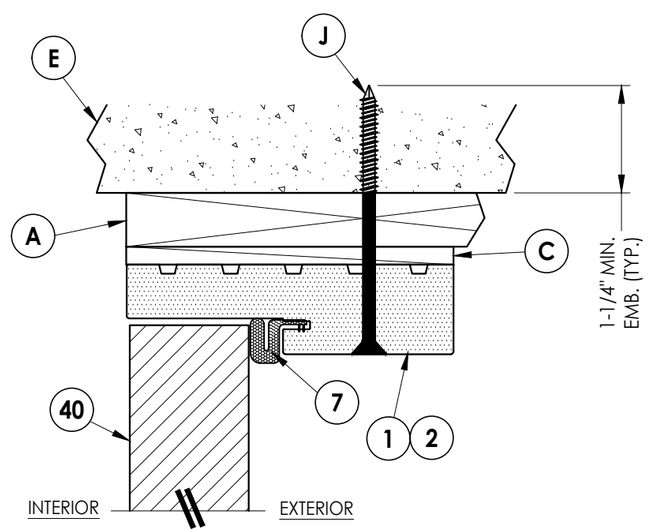

3/6 VERTICAL CROSS SECTION
Inswing Shown (Outswing Similar)
1X Buck Construction

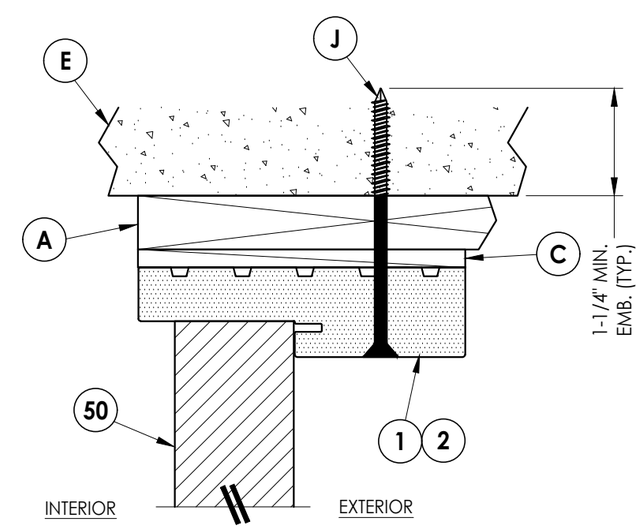

4/6 VERTICAL CROSS SECTION
Inswing Shown (Outswing Similar)
1X Buck Construction

NOTE:
1. Sidelite attached @ 6" from each end plus 4 more screws equally spaced between (6 screws total per jamb).

Documents Prepared By:
Lyndon F. Schmidt
P.E. No. 43409

RW BUILDING CONSULTANTS, INC.
P.O. Box 230, Valrico, FL 33595
Phone No.: 813.659.9197
FBPE Registry No. 9813

PRODUCT: ODL, INC. STEEL DOOR

PART OR ASSEMBLY: HORIZONTAL & VERTICAL CROSS SECTIONS (1X BUCK)

NO.	DATE	REVISIONS	BY
3	3/30/26	MANUFACTURER'S NAME CHANGE	LFS

DATE: 3/18/26
SCALE: N.T.S.
DWG. BY: LFS
CHK. BY: RW
DRAWING NO.: FL-29651.5
SHEET 6 OF 12

© 2026 R.W. BUILDING CONSULTANTS INC.

Z:\2023 FBC Drawings\ODL, Inc\FL-29651 R3\FL-29651.4-6.dwg

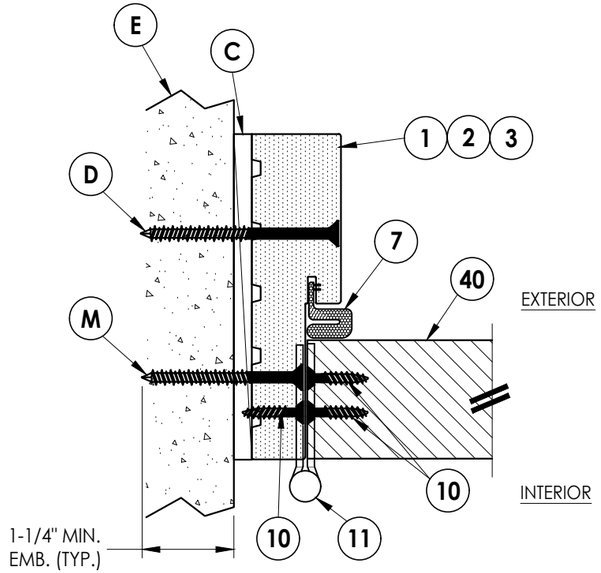

1/7 HORIZONTAL CROSS SECTION
Inswing Shown (Outswing Similar)
Shown Direct to Masonry

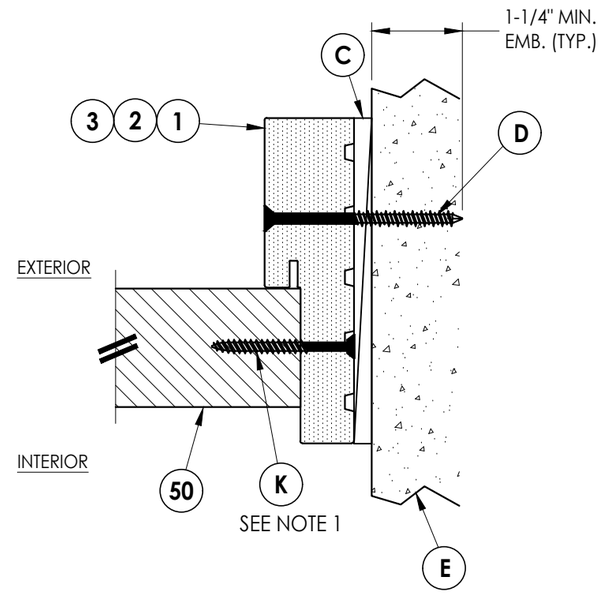

2/7 HORIZONTAL CROSS SECTION
Inswing Shown (Outswing Similar)
Shown Direct to Masonry

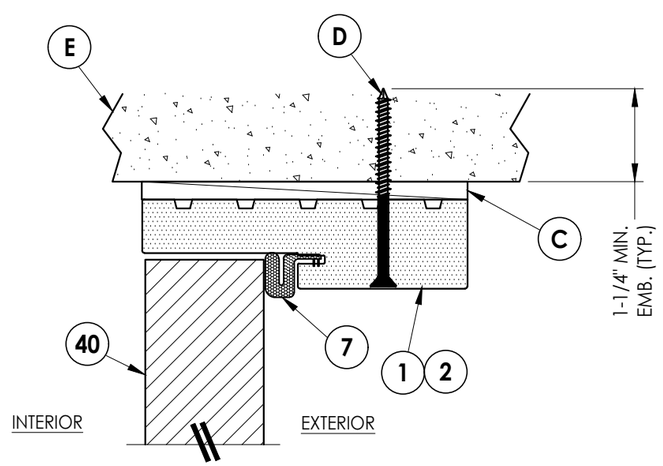

3/7 VERTICAL CROSS SECTION
Inswing Shown (Outswing Similar)
Shown Direct to Masonry

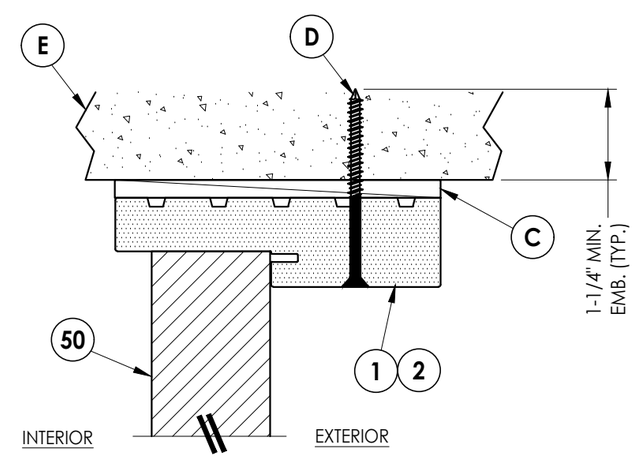

4/7 VERTICAL CROSS SECTION
Inswing Shown (Outswing Similar)
Shown Direct to Masonry

NOTE:
1. Sidelite attached @ 6" from each end plus 4 more screws equally spaced between (6 screws total per jamb).

Documents Prepared By:
Lyndon F. Schmidt
P.E. No. 43409
RW BUILDING CONSULTANTS, INC.
P.O. Box 230, Valrico, FL 33595
Phone No.: 813.659.9197
FBPE Registry No. 9813

PRODUCT: ODL, INC. STEEL DOOR

PART OR ASSEMBLY: HORIZONTAL & VERTICAL CROSS SECTIONS (DIRECT TO MASONRY)

NO.	DATE	MANUFACTURER'S NAME CHANGE	BY
3	3/30/26		LFS

REVISIONS

DATE: 3/18/26
SCALE: N.T.S.
DWG. BY: LFS
CHK. BY: RW
DRAWING NO.: FL-29651.5
SHEET 7 OF 12

© 2026 R.W. Building Consultants Inc.

Z:\2023 FBC Drawings\ODL, Inc\FL-29651 R3\FL-29651.4-6.dwg

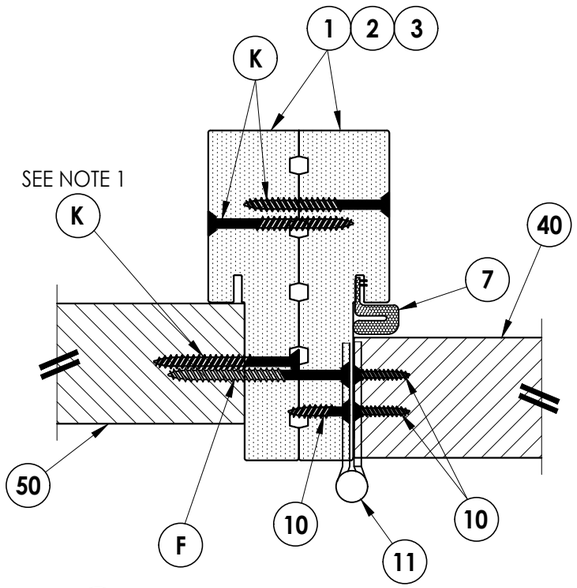

1/8 HORIZONTAL CROSS SECTION
Inswing Shown (Outswing Similar)

EXTERIOR

INTERIOR

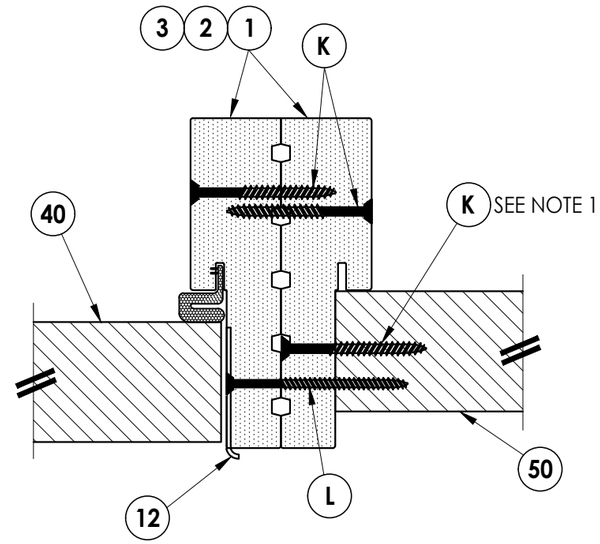

2/8 HORIZONTAL CROSS SECTION
Inswing Shown (Outswing Similar)

NOTE:
1. Sidelite attached @ 6" from each end plus 4 more screws equally spaced between (6 screws total per jamb).

Documents Prepared By:
Lyndon F. Schmidt
P.E. No. 43409
RW BUILDING CONSULTANTS, INC.
P.O. Box 230, Valrico, FL 33595
Phone No.: 813.659.9197
FBPE Registry No. 9813

PRODUCT: ODL, INC. STEEL DOOR

PART OR ASSEMBLY: HORIZONTAL CROSS SECTIONS

NO.	DATE	REVISIONS	BY
3	3/30/26	MANUFACTURER'S NAME CHANGE	LFS

DATE: 3/18/26
SCALE: N.T.S.
DWG. BY: LFS
CHK. BY: RW
DRAWING NO.: FL-29651.5
SHEET 8 OF 12

© 2026 R.W. Building Consultants Inc.

Z:\2023 FBC Drawings\ODL, Inc\FL-29651 R3\FL-29651.4-6.dwg

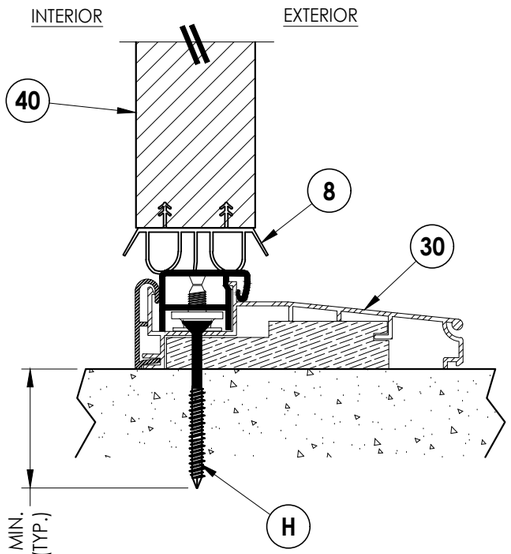

1/9 VERTICAL CROSS SECTION
Inswing sill

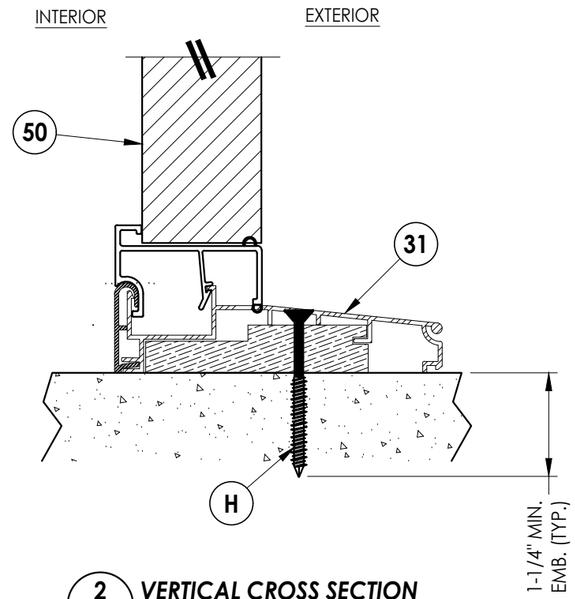

2/9 VERTICAL CROSS SECTION
Inswing sill

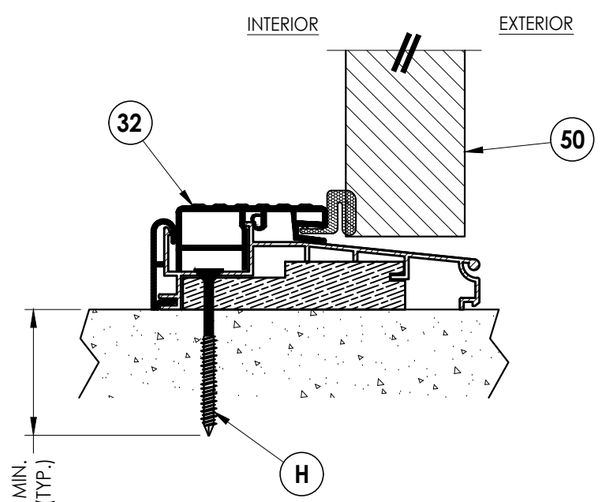

3/9 VERTICAL CROSS SECTION
Outswing sill

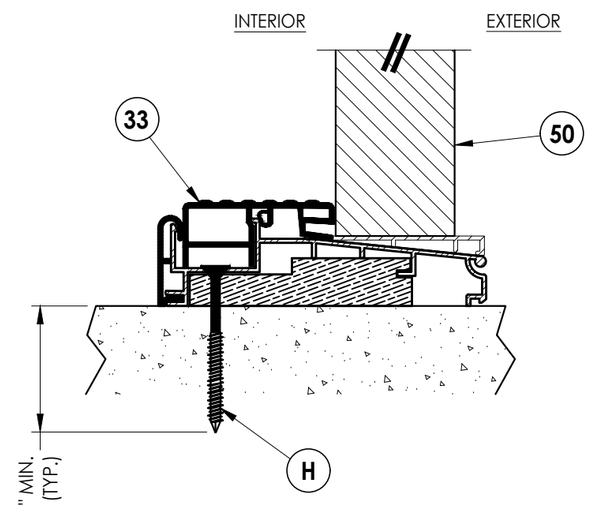

4/9 VERTICAL CROSS SECTION
Outswing sill

Documents Prepared By:
Lyndon F. Schmidt
P.E. No. 43409

RW BUILDING CONSULTANTS, INC.
P.O. Box 230, Valrico, FL 33595
Phone No.: 813.659.9197
FBPE Registry No. 9813

PRODUCT: ODL, INC. STEEL DOOR

PART OR ASSEMBLY: VERTICAL CROSS SECTIONS

REVISIONS

NO.	DATE		BY
3	3/30/26	MANUFACTURER'S NAME CHANGE	LFS

DATE: 3/18/26
SCALE: N.T.S.
DWG. BY: LFS
CHK. BY: RW
DRAWING NO.: FL-29651.5
SHEET 9 OF 12

© 2026 R.W. Building Consultants Inc.

Z:\2023 FBC Drawings\ODL, Inc\FL-29651 R3\FL-29651.4-6.dwg

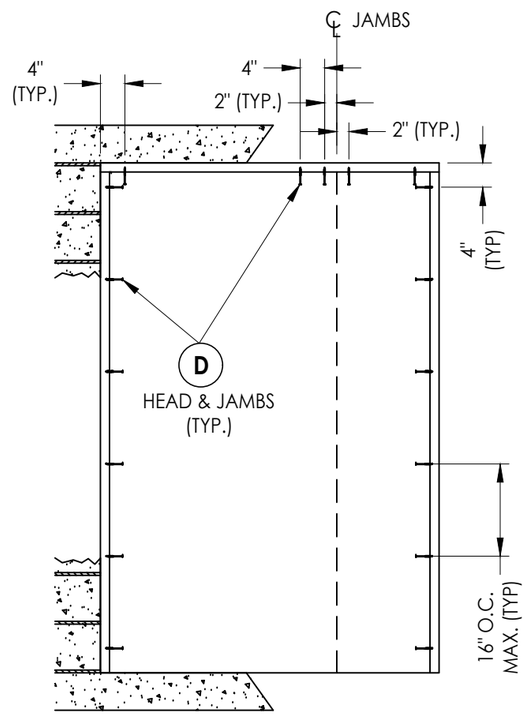

XO / OX

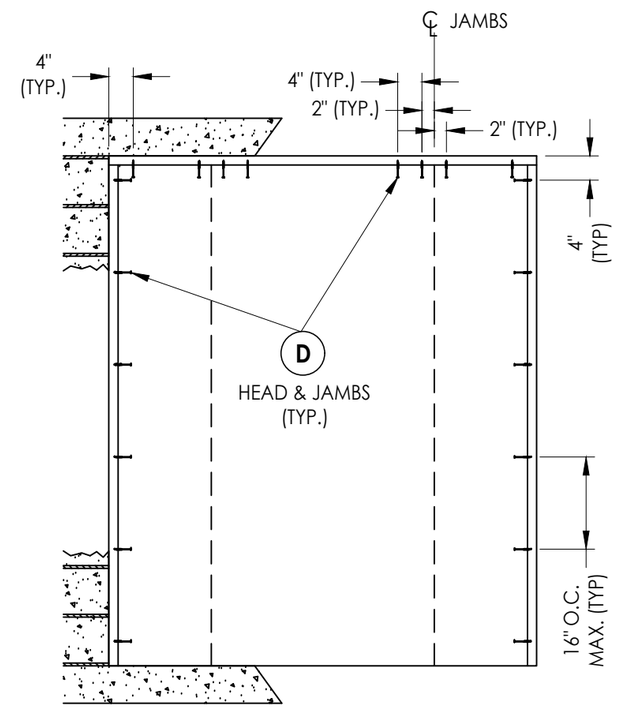

OXO

2X BUCK ANCHORING

CONCRETE ANCHOR NOTES:

1. Concrete anchor locations at the corners may be adjusted to maintain the min. edge distance to mortar joints.
2. Concrete anchor locations noted as "MAX. ON CENTER" must be adjusted to maintain the min. edge distance to mortar joints, additional concrete anchors may be required to ensure the "MAX. ON CENTER" dimension are not exceeded.
3. Concrete anchor table:

ANCHOR TYPE	ANCHOR SIZE	MIN. EMBEDMENT	MIN. CLEARANCE TO MASONRY EDGE	MIN. CLEARANCE TO ADJACENT ANCHOR
ITW BUILDEX TAPCON®	3/16"	1-1/4"	3"	1-1/2"
	1/4"	1-1/4"	2"	4"
DeWALT ULTRACON+®	1/4"	1-1/4"	1"	4"

WOOD SCREW INSTALLATION NOTES:

1. Maintain a minimum 5/8" edge distance, 1" end distance, & 1" o.c. spacing of wood screws to prevent the splitting of wood.

Documents Prepared By:
Lyndon F. Schmidt
P.E. No. 43409
RW BUILDING CONSULTANTS, INC.
P.O. Box 230, Valrico, FL 33595
Phone No.: 813.659.9197
FBPE Registry No. 9813

PRODUCT: ODL, INC. STEEL DOOR

PART OR ASSEMBLY: BUCK ANCHORING

NO.	DATE	MANUFACTURER'S NAME CHANGE	BY
3	3/30/26		LFS

REVISIONS

DATE: 3/18/26
SCALE: N.T.S.
DWG. BY: LFS
CHK. BY: RW
DRAWING NO.: FL-29651.5
SHEET 10 OF 12

© 2026 R.W. Building Consultants Inc.

Z:\2023 FBC Drawings\ODL, Inc\FL-29651 R3\FL-29651.4-6.dwg

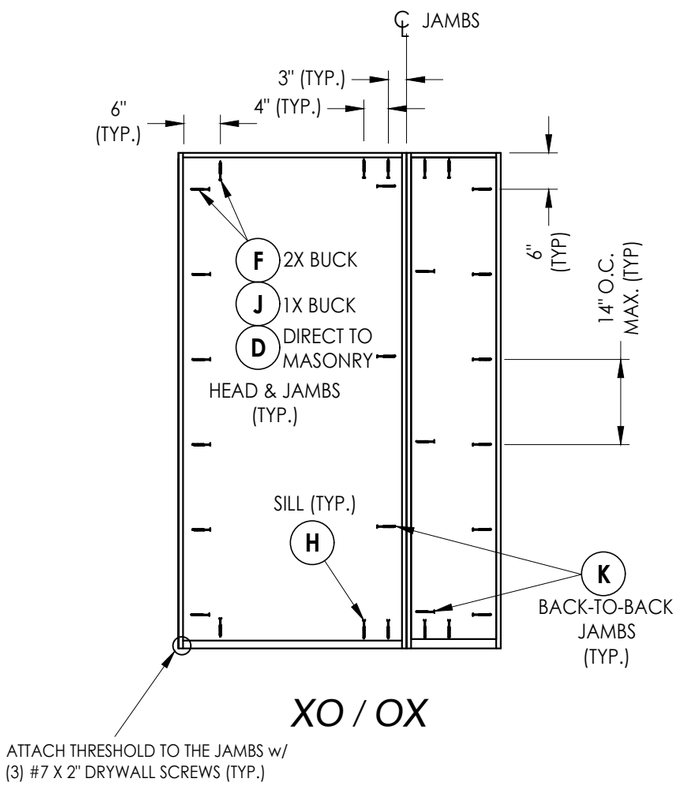

XO / OX

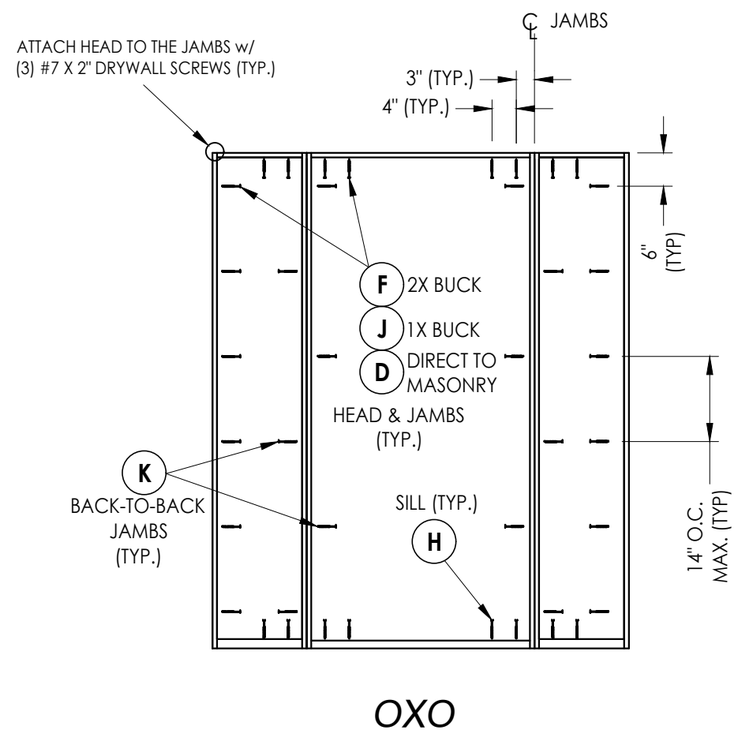

OXO

FRAME ANCHORING

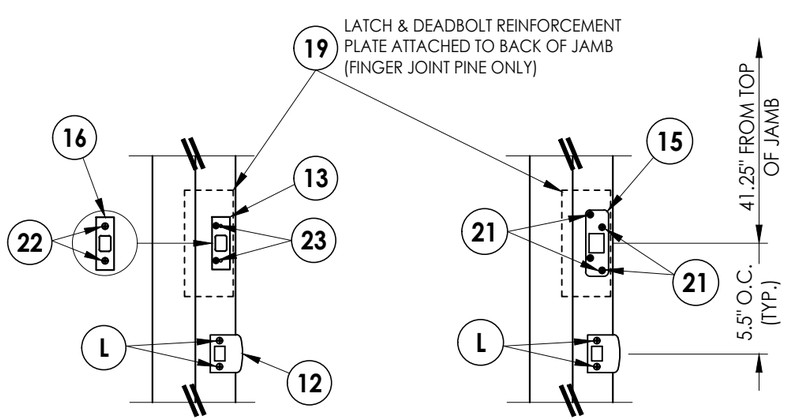

LATCH & DEADBOLT DETAIL
Schlage

LATCH & DEADBOLT DETAIL
Kwikset

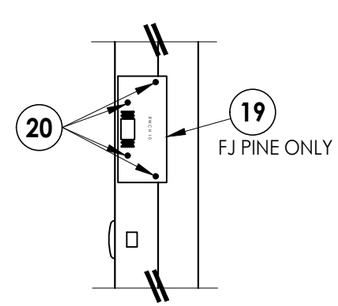

LATCH & DEADBOLT DETAIL
Reinforcement Plate

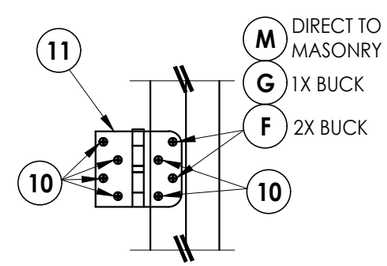

HINGE DETAIL
INSWING

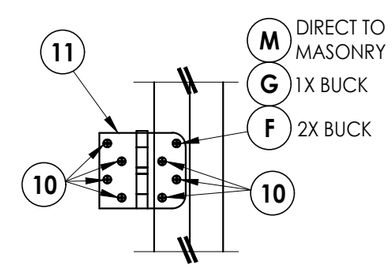

HINGE DETAIL
OUTSWING

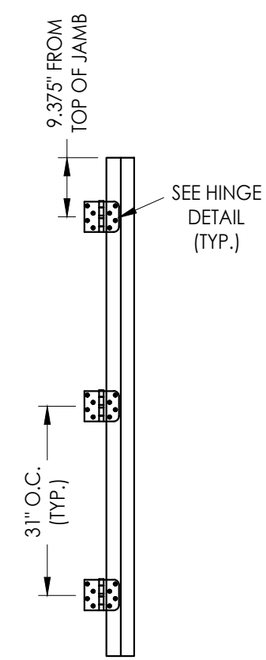

HINGE JAMB

Documents Prepared By:
Lyndon F. Schmidt
P.E. No. 43409

RW BUILDING CONSULTANTS, INC.
P.O. Box 230, Valrico, FL 33595
Phone No.: 813.659.9197
FBPE Registry No. 9813

PRODUCT: ODL, INC. STEEL DOOR

PART OR ASSEMBLY: FRAME ANCHORING & HARDWARE DETAILS

NO.	DATE	MANUFACTURER'S NAME CHANGE	BY
3	3/30/26		LFS

REVISIONS

DATE: 3/18/26
SCALE: N.T.S.
DWG. BY: LFS
CHK. BY: RW
DRAWING NO.: FL-29651.5
SHEET 11 OF 12

© 2026 R.W. BUILDING CONSULTANTS INC.

Z:\2023 FBC Drawings\ODL, Inc\FL-29651 R3\FL-29651.4-6.dwg

BILL OF MATERIALS

ITEM #	DESCRIPTION	MATERIAL
A	1X BUCK (G >= 0.42)	WOOD
B	2X BUCK (G >= 0.42)	WOOD
C	1/4" MAX. SHIM SPACE	-
D	1/4" X 2-3/4" PFH DeWALT OR ITW CONCRETE SCREW	STEEL
E	MASONRY - 3,000 PSI MIN. CONCRETE CONFORMING TO ACI 301 OR HOLLOW BLOCK CONFORMING TO ASTM C90	CONCRETE
F	#10 X 2-1/2" PFH WOOD SCREW (1.15" MIN. EMBEDMENT)	STEEL
G	3/16" X 3-1/4" PFH ITW CONCRETE SCREW	STEEL
H	1/4" X 2-1/4" PFH DeWALT OR ITW CONCRETE SCREW	STEEL
J	1/4" X 3-3/4" PFH DeWALT OR ITW CONCRETE SCREW	STEEL
K	#10 X 2" PFH WOOD SCREW	STEEL
L	#8 X 2-1/2" PFH WOOD SCREW	STEEL
M	3/16" X 2-1/4" PFH ITW CONCRETE SCREW	STEEL
1	COMPOSITE JAMB	COMP
2	FINGER JOINT PINE JAMB (G >= 0.42)	WOOD
3	COMPOSITE CAVITY JAMB	COMP
7	WEATHERSTRIP	FOAM
8	DOOR BOTTOM SWEEP	VINYL
10	#10 X 1" PFH WOOD SCREW	STEEL
11	4" X 4" BUTT HINGE	STEEL
12	LATCH STRIKE PLATE	STEEL
13	DEADBOLT STRIKE PLATE	STEEL
15	DEADBOLT STRIKE PLATE (SECURITY)	STEEL
16	DEADBOLT STRIKE BACK PLATE (SCHLAGE)	STEEL
19	LATCH & DEADBOLT REINFORCEMENT PLATE (4" X 8" - 16 GA. STEEL PLATE)	STEEL
20	#8 X 1/2" SD PH SMS	STEEL
21	#10 X 3" PFH SMS	STEEL
22	#10 X 3/4" FH SMS	STEEL
23	#12 X 2-1/2" PFH WOOD SCREW	STEEL
30	INSWING THRESHOLD	ALUM/WOOD
31	INSWING THRESHOLD w/ SIDELITE ADAPTER	ALUM/COMP
32	OUTSWING THRESHOLD	ALUM/WOOD
33	OUTSWING THRESHOLD w/ SIDELITE ADAPTER	ALUM/WOOD
40	DOOR PANEL - SEE DOOR PANEL DETAIL SHEET FOR DETAILS	-
50	SIDELITE PANEL - SEE SIDELITE PANEL DETAIL SHEET FOR DETAILS	-

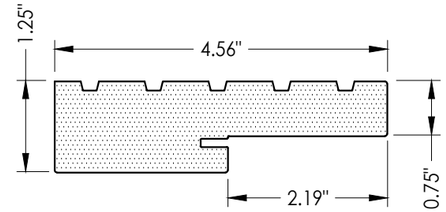

1 **COMPOSITE JAMB**
WORLDWIDE 4EVER JAMB

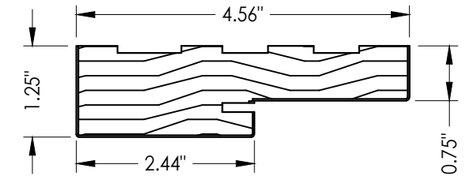

2 **FINGER JOINT PINE JAMB**

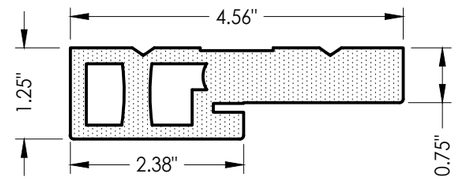

3 **COMPOSITE CAVITY JAMB**
WORLDWIDE 4EVER JAMB

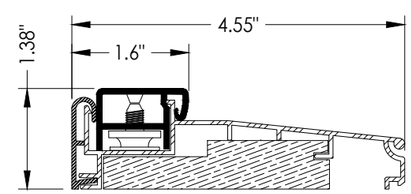

30 **INSWING THRESHOLD**
WORLDWIDE

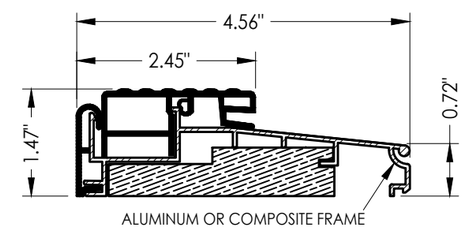

32 **OUTSWING THRESHOLD**
WORLDWIDE

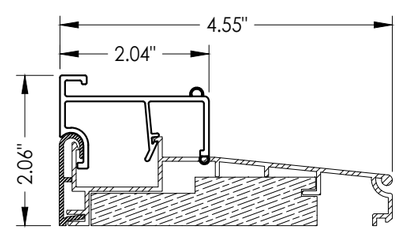

31 **INSWING THRESHOLD w/ SIDELITE ADAPTER**
WORLDWIDE

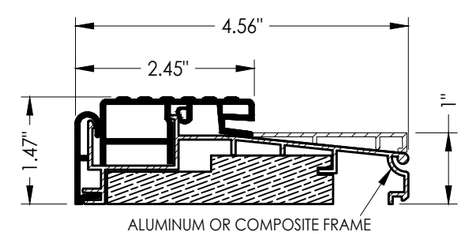

33 **INSWING THRESHOLD w/ SIDELITE ADAPTER**
WORLDWIDE

Documents Prepared By:
Lyndon F. Schmidt
P.E. No. 43409

RW BUILDING CONSULTANTS, INC.
P.O. Box 230, Valrico, FL 33595
Phone No.: 813.659.9197
FBPE Registry No. 9813

PRODUCT: ODL, INC. STEEL DOOR

PART OR ASSEMBLY: BILL OF MATERIALS & COMPONENTS

NO.	DATE	MANUFACTURER'S NAME CHANGE	BY
3	3/30/26		LFS

REVISIONS

DATE: 3/18/26
SCALE: N.T.S.
DWG. BY: LFS
CHK. BY: RW
DRAWING NO.: FL-29651.5
SHEET 12 OF 12

© 2026 R.W. Building Consultants Inc.

Z:\2023 FBC Drawings\ODL, Inc\FL-29651 R3\FL-29651.4-6.dwg